Renaissance: The Beginning of Modern Painting

The Top Four Breakthroughs

- Oil on Stretched Canvas
  - A greater range of colors with smooth gradations of tone permitted painters to represent textures and simulate 3D form.
- Perspective
  - Linear perspective: created optical effect of objects receding in the distance through lines that appear to converge at a single point (vanishing point). Invented by Brunelleschi.
  - Atmospheric perspective
  - Reduce size (foreshortening) or mute colors

The Top Four Breakthroughs

- Use of light and shadow
  - Chiaroscuro (light/dark): technique for modeling forms in painting by which lighter parts seem to emerge from darker areas, producing the illusion of rounded, sculptural relief on a flat surface.
- Pyramid Configuration
  - Symmetrical composition builds to a climax at the center (more 3D than past techniques).

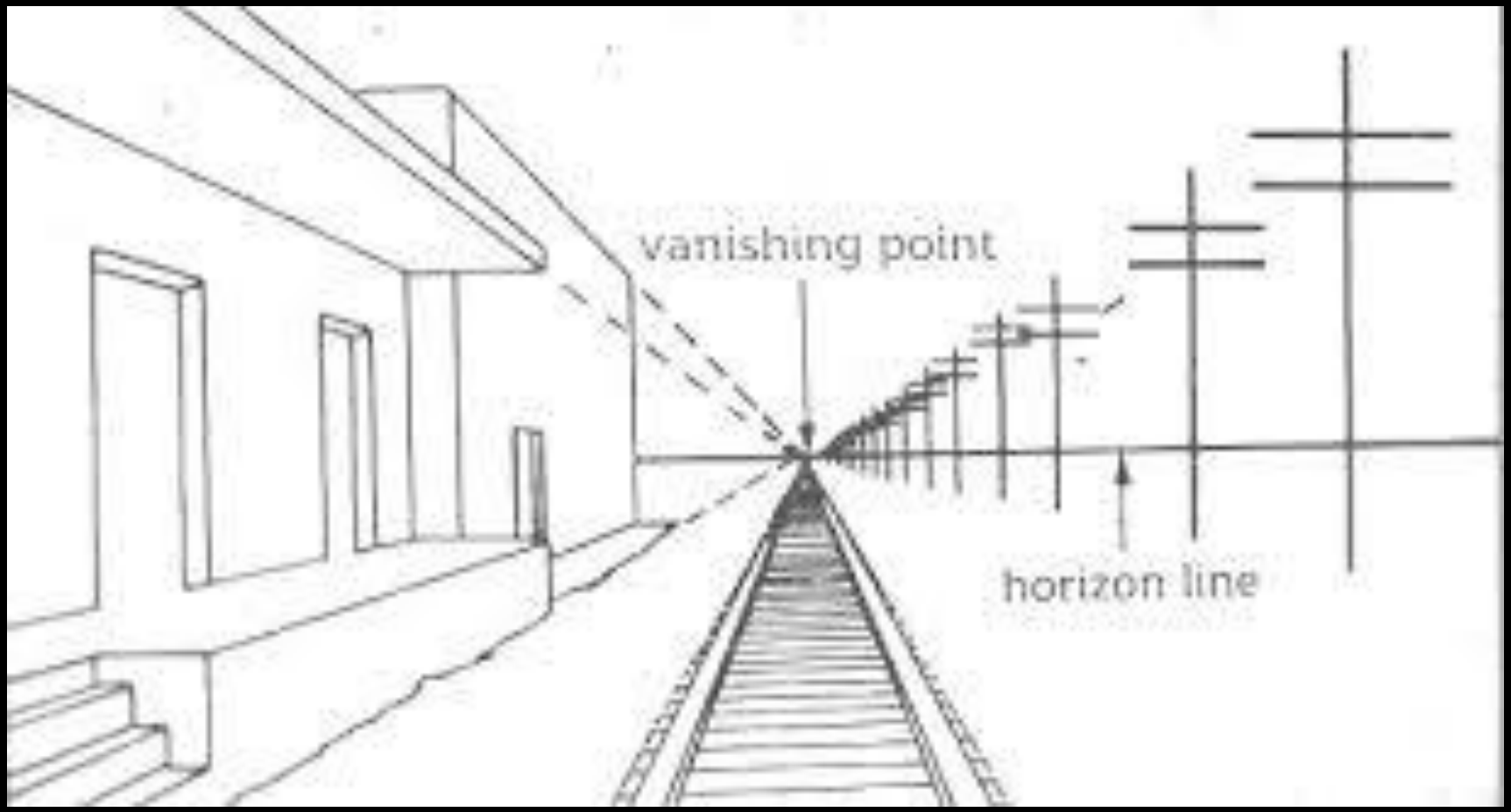
vanishing point
horizon line

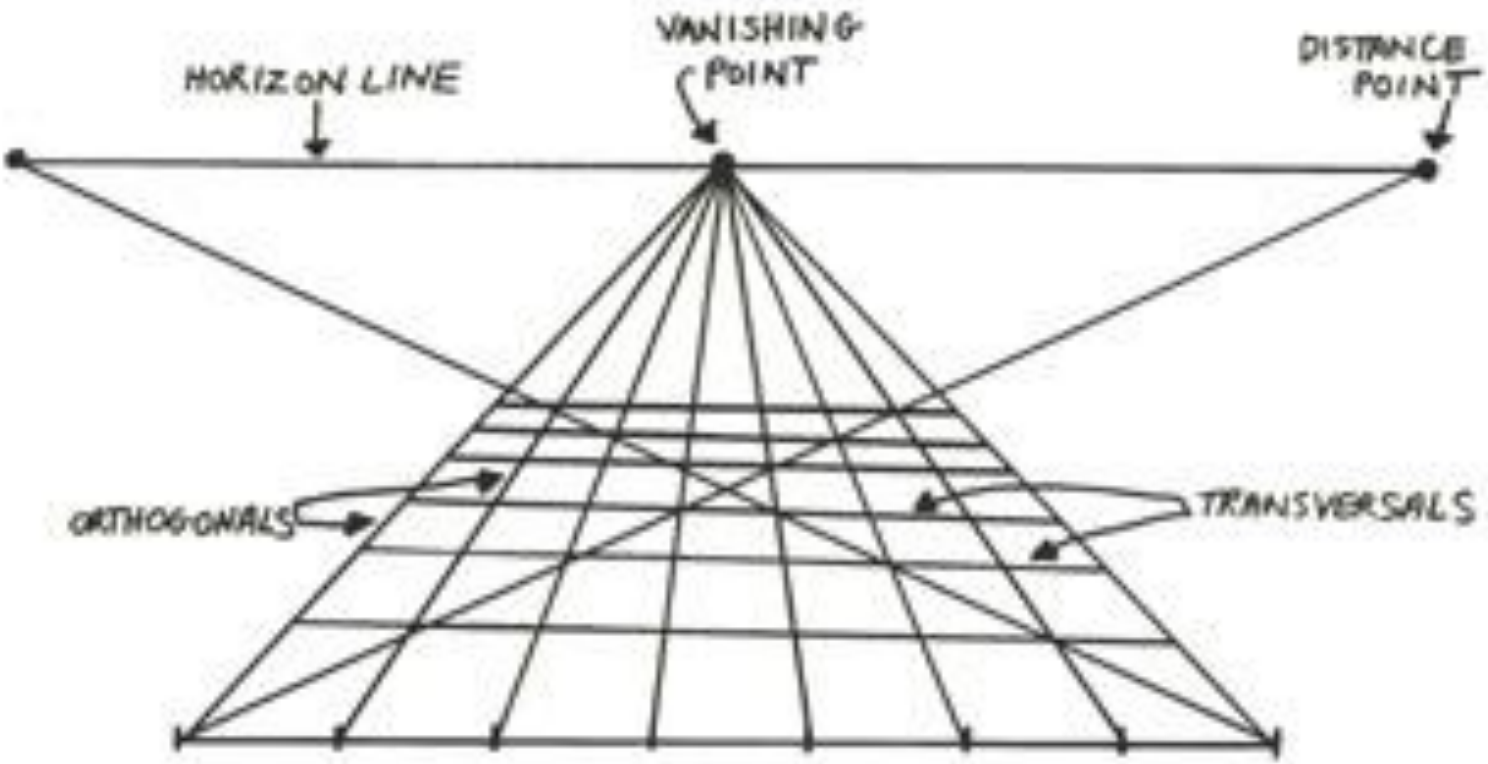
HORIZON LINE
VANISHING POINT
DISTANCE POINT
ORTHOGONALS
TRANSVERSALS

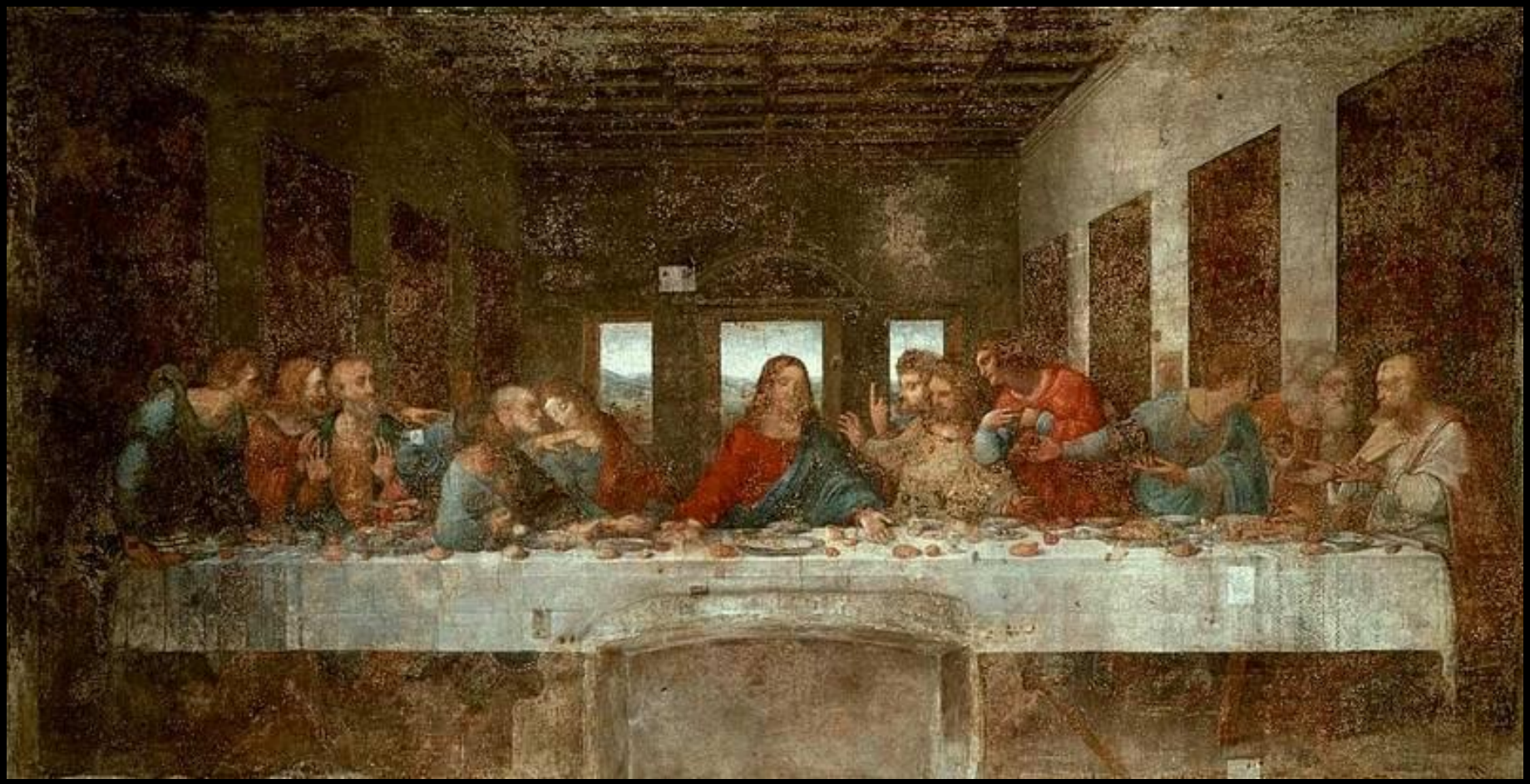

Masaccio

Tribute Money

ca. 1427
fresco
8 ft. 1 in. x 19 ft. 7 in.

Masaccio

- Founder of Early Renaissance painting
- “Masaccio made his figures stand upon their feet”
- Master of perspective and his use of a single, constant source of light casting accurate shadows.

Masaccio

Expulsion of Adam and Eve from Eden

Brancacci Chapel, Santa Maria del Carmine, Florence, Italy

ca. 1425
fresco
7 ft. x 2 ft. 11 in.

Masaccio

Holy Trinity

Santa Maria Novella,

Florence, Italy

ca. 1428
fresco
21 ft. x 10 ft. 5 in.

Masaccio

Holy Trinity

Santa Maria Novella, Florence, Italy

ca. 1428
fresco
21 ft. x 10 ft. 5 in.

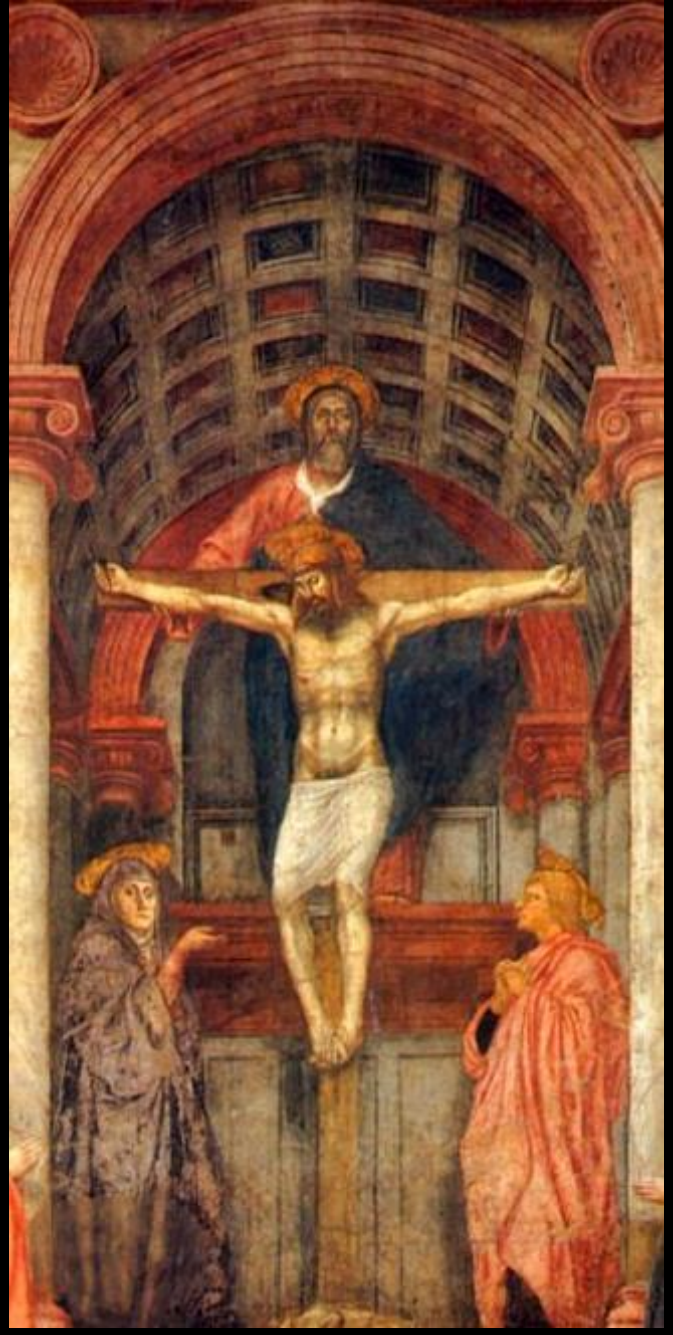

Masaccio

Holy Trinity

Santa Maria Novella, Fl

ca. 1428
fresco
21 ft. x 10 ft. 5 in.

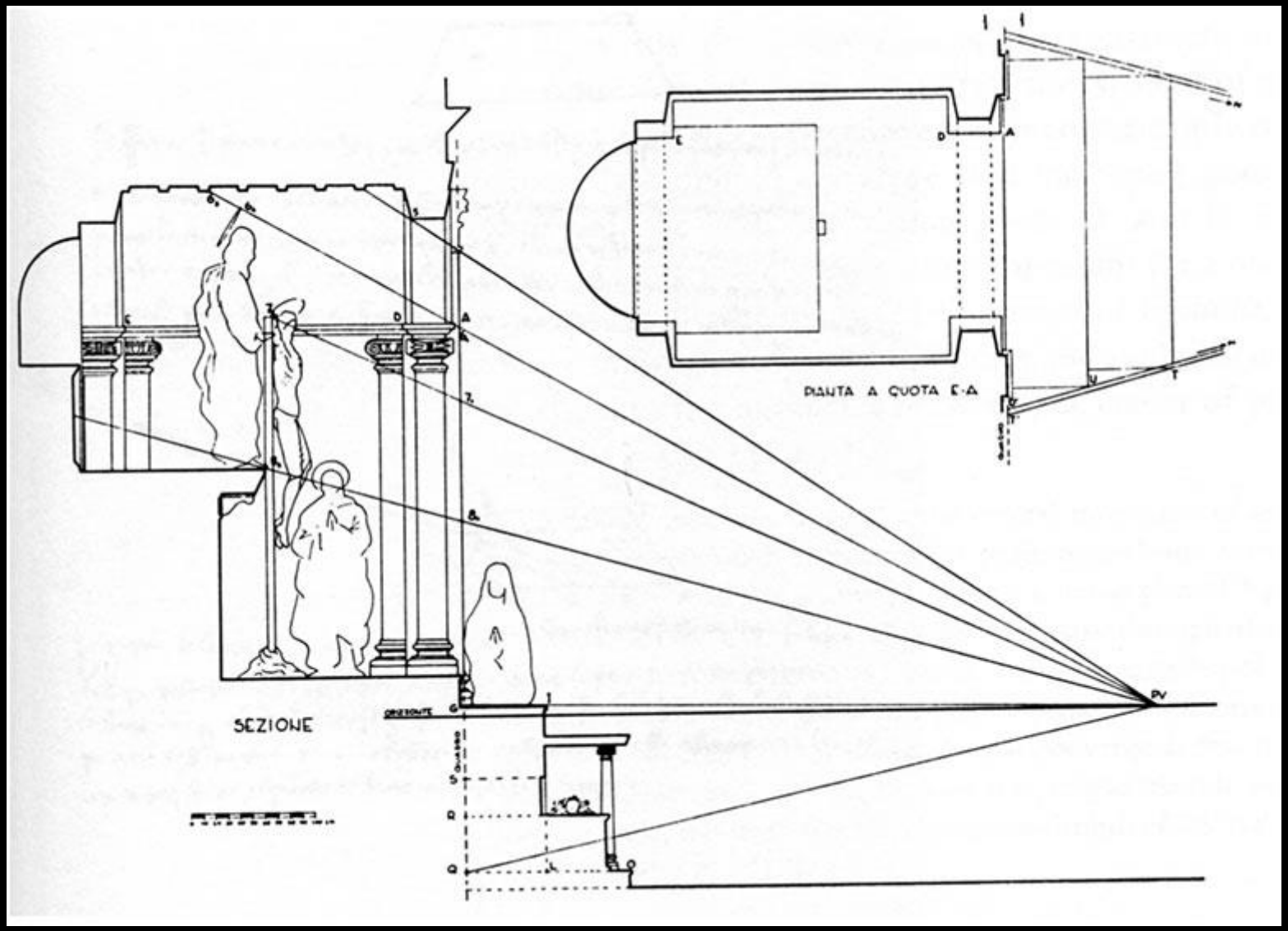
PIANTA A QUOTA E-A
SEZIONE
ORIZZONTE
PV

Masaccio

Holy Trinity

Santa Maria Novella, Florence, Italy

ca. 1428
fresco
21 ft. x 10 ft. 5 in.

Cambio et al.

Florence Cathedral

Florence, Italy

begun 1296

Cambio et al.

Florence Cathedral

Florence, Italy

begun 1296

- Last Judgment scene
- *Choirs of Angels*; *Christ, Mary and Saints*; *Virtues, Gifts of the Holy Spirit and Beatitudes*; and at the bottom *Capital Sins and Hell*.

Donatello

- Uses contrapposto (what is this again?)
- Sculpted/draped figures realistically with a sense of their underlying skeletal structure.
- “David” was the first life-size, freestanding nude sculpture since the Classical period.

Donatello

David

ca. 1428-1432
bronze
5 ft. 2 1/4 in. high

Journal #5

Andrea del Verrocchio

David

ca. 1465-1470
bronze
approximately 4 ft. 1 1/2 in. high

Donatello

Saint Mark

Or San Michele, Florence, Italy

1411-1413
marble
figure 7 ft. 9 in. high

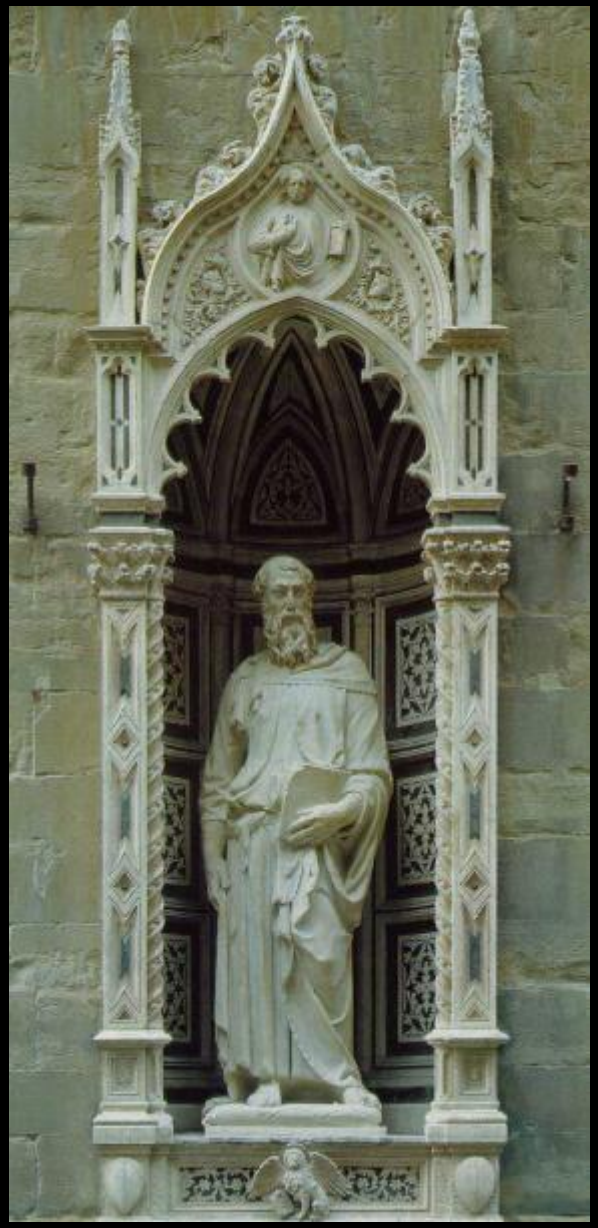

Donatello

Saint Mark

Or San Michele, Florence, Italy

1411-1413
marble
figure 7 ft. 9 in. high

Donatello

prophet figure (*Zuccone*)

Florence Cathedral, Florence, Italy

1423-1425
marble
figure 6 ft. 5 in. high

- http://www.khanacademy.org/humanities/art-history/art-history-1400-1500-renaissance-in-italy-and-the-north/florence-1/v/casting-bronze-indirect-lost-wax

- Madonna-Italian for “My Lady”

Fra Filippo Lippi

Lippi
Madonna and Child with Two Angels

Uffizi Gallery, Florence

1460-1465
Tempera on Panel
36 in. x 25 in.

Mantegna

Andrea Mantegna

Saint James Lead to Martyrdom

Ovetari Chapel,
Church of the Eremitani, Padua, Italy

ca. 1455
fresco
10 ft. 9 in. wide

What is different about this piece? Think composition as well as other depictions of the same subject matter.

Andrea Mantegna

Dead Christ

ca. 1501
tempera on canvas
2 ft. 2 3/4 in. x 2 ft. 7 7/8 in.